quadBRI PCI ISDN 2.0

Configuration Overview

Card ID switches

DIP switches 1 to 3 can be used to set the card ID (very useful for remotely identifying individual cards)

Card-ID	0	1	2	3	4	5	6	7
SW 1	OFF	ON	OFF	ON	OFF	ON	OFF	ON
SW 2	OFF	OFF	ON	ON	OFF	OFF	ON	ON
SW 3	OFF	OFF	OFF	OFF	ON	ON	ON	ON

NT/TE Settings

	Set all jumpers to the left to select NT mode for this port.
	Set all jumpers to the right to select TE mode for this port.

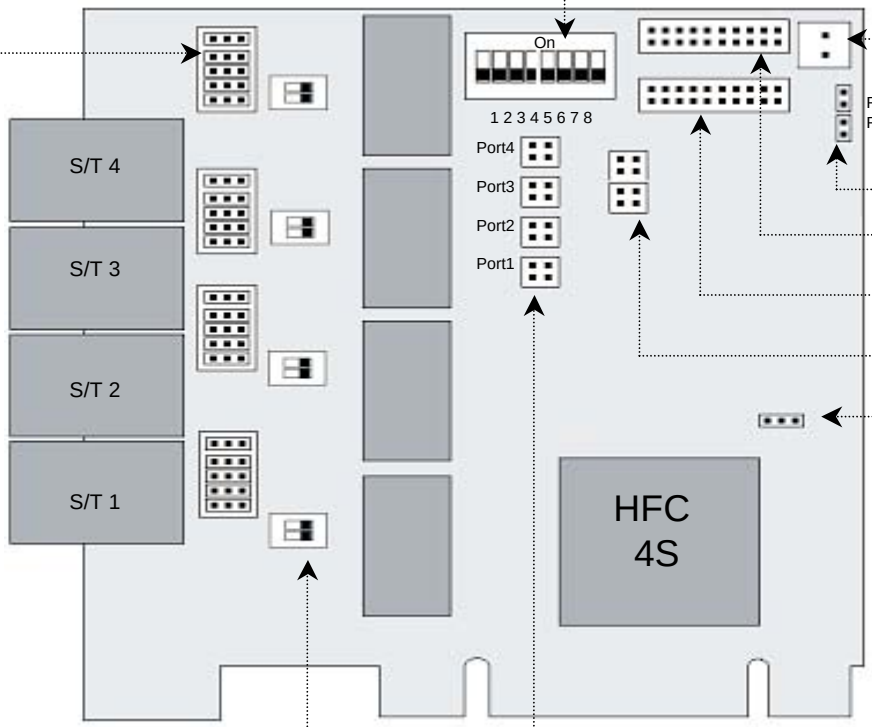

Power Connector

Connector for external power feeding module to feed S/T Interfaces of up to 4 quadBRI cards. (Available optionally)

Watchdog Connector

Connector for watchdog functionality

PCM Out

PCM In

onboard PFM connector

Power Supply Configuration

	uses 3.3 V from the PCI bus (only available in 3.3 V PCI slots)
	generates 3.3 V out of the 5 V from the PCI bus (factory default)

Warning

This equipment will be inoperable when main power fails

Termination of S/T Interface (100 Ω)

	Both Switches in ON Position : Termination = ON
	Both Switches in OFF Position : Termination = OFF

Power Feeding (only for NT Mode)

	Power feeding enabled for the the corresponding port if jumpers set (PFM required)
	Not powered if no jumpers set.

CE